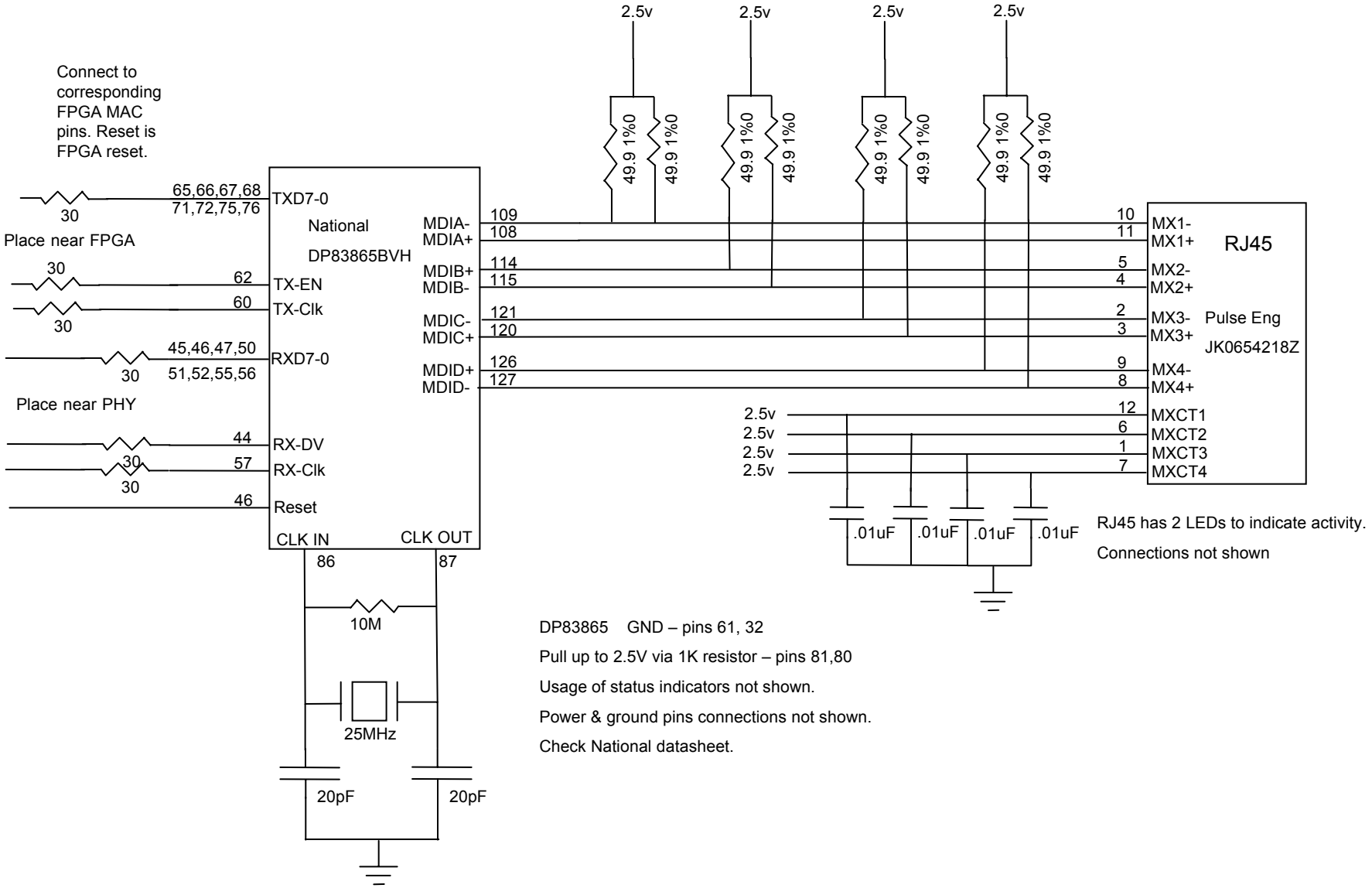

ChipEnet Inc. Copyright 2006